STAPLE

basic education

Department:
Basic Education
REPUBLIC OF SOUTH AFRICA

NATIONAL SENIOR CERTIFICATE

GRADE 12

ENGINEERING GRAPHICS AND DESIGN P1

NOVEMBER 2015

MARKS: 100

TIME: 3 hours

This question paper consists of 6 pages.

INSTRUCTIONS AND INFORMATION

1. This question paper consists of FOUR questions.
2. Answer ALL the questions.
3. ALL drawings are in first-angle orthographic projection, unless otherwise stated.
4. ALL drawings must be completed using instruments, unless otherwise stated.
5. ALL answers must be drawn accurately and neatly.
6. ALL the questions must be answered on the QUESTION PAPER as instructed.
7. ALL the pages, irrespective of whether the question was attempted or not, must be re-stapled in numerical sequence in the TOP LEFT-HAND CORNER ONLY.
8. Time management is essential in order to complete all the questions.
9. Print your examination number in the block provided on every page.
10. Any details or dimensions not given must be assumed in good proportion.

FOR OFFICIAL USE ONLY																
QUESTION	MARKS OBTAINED			½	SIGN	MODERATED			½	SIGN	RE-MARKING			½	SIGN
1															
2															
3															
4															
TOTAL															
	2	0	0			2	0	0			2	0	0		

FINAL CONVERTED MARK	CHECKED BY
100	

COMPLETE THE FOLLOWING:
CENTRE NUMBER
CENTRE NUMBER
EXAMINATION NUMBER
EXAMINATION NUMBER

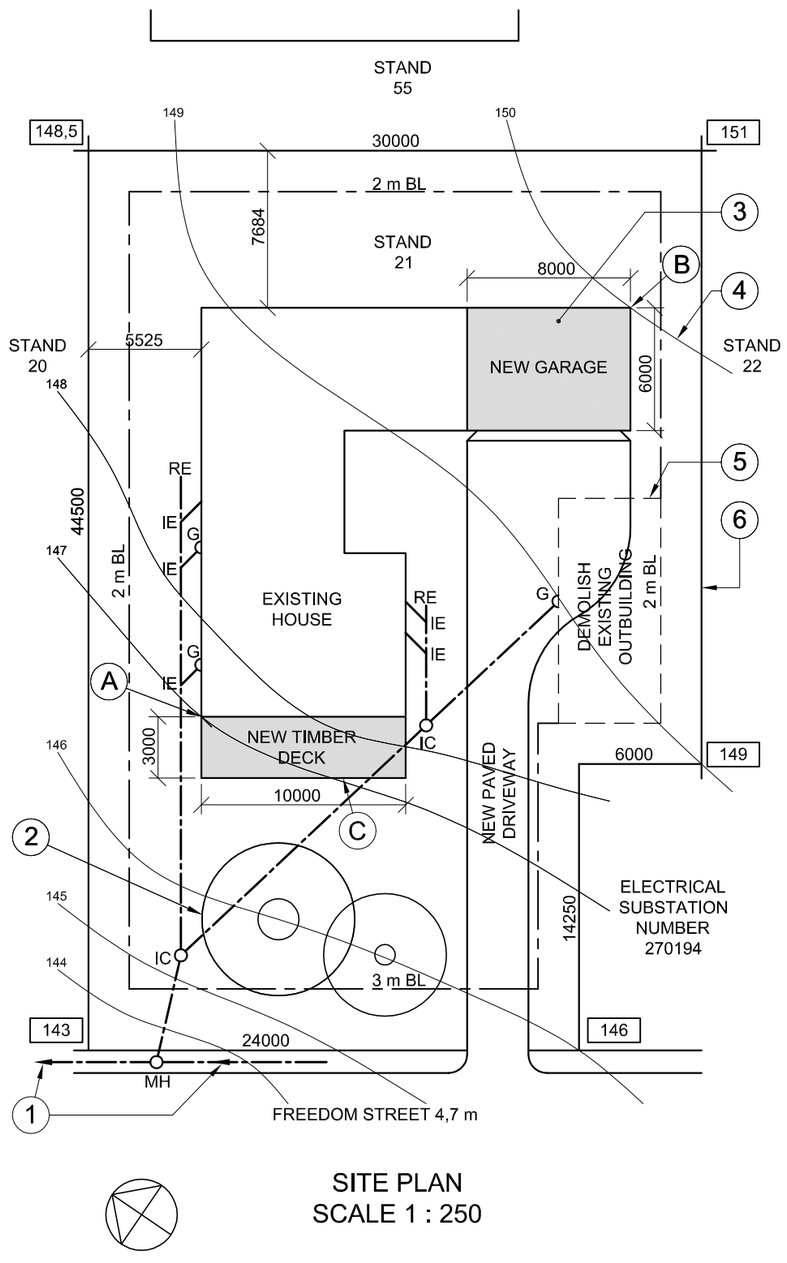

SITE PLAN
SCALE 1 : 250

NOTE:
Contractors must verify all dimensions and levels on site before commencing work. Architects must be notified immediately of any discrepancies.

ARCHITECT'S SIGNATURE .....

CLIENT'S SIGNATURE .....

ANSWER 20
In the space below, draw, in neat freehand, the front view and top view of the *SANS 10143* graphical symbol for a BATH.

REVISION	DATE	DESCRIPTION
1	2015-01-27	Add timber deck

KEY ARCHITECTS
96 Protea Street
POTCHEFSTROOM
083 130 2201
key@webmail.co.za

PRINTED BY	DATE OF PRINT
ILM PRINTERS	2015-02-13

DRAWING TITLE
SITE PLAN

PROJECT
PROPOSED NEW GARAGE AND TIMBER DECK FOR MRS SCHUTTE ON STAND 21, FREEDOM STREET.

PROJECT NUMBER	DRAWING NUMBER
AFSP-2015	VG 002

DATE	DRAWN	CHECKED	SCALE
2015-01-10	AD	BC	1 : 250

REFERENCE CODE
Q1P1N2015

QUESTION 1: ANALYTICAL (CIVIL)

Given:
The site plan of a existing house with a proposed new garage and timber deck, a title panel and a table of questions. The drawing has not been prepared to the indicated scale.

Instructions:
Complete the table below by neatly answering the questions, which refer to the accompanying drawing and title panel. **[30]**

	QUESTIONS	ANSWERS			
1	What is the project number?		1		
2	How many signatures are required?		1		
3	How many revisions have been made to the drawing?		1		
4	Who is the client?		1		
5	On what date was the site plan printed?		1		
6	How many new additions are indicated on the site plan?		1		
7	What does the abbreviation *IC* stand for?		1		
8	What is indicated by the arrows on the line at 1?		1		
9	Name the feature at 2.		1		
10	In what colour should the feature at 3 be shown?		1		
11	What does the line at 4 indicate?		1		
12	What does the broken line at 5 indicate?		1		
13	What is the length of the boundary line at 6 in metres?		1		
14	What is the width of Freedom Street in millimetres?		1		
15	What is the difference in ground level height between corner A and corner B of the buildings in metres?		2		
16	On which side of the existing house is the new timber deck?		2		
17	Which municipal service is found on the land adjacent to stand 21?		2		
18	In the space below, determine the perimeter of the existing house in metres.		3		
19	In the space below, determine the combined total area of the existing house and the new garage in square metres.		3		
20	In the space provided in the title panel, draw, in neat freehand, the front view and top view of the *SANS 10143* graphical symbol for a BATH.		4		
		TOTAL 30			

ANSWER 18
Show ALL calculations.

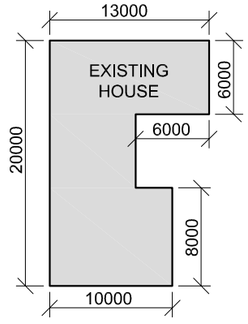

ANSWER 19
Show ALL calculations.

EXAMINATION NUMBER	
EXAMINATION NUMBER	2

STAPLE

QUESTION 2: INTERPENETRATION AND DEVELOPMENT

Given:

- The incomplete front view and top view of an equilateral triangular prism that has been shaped to fit around a right regular hexagonal prism. The axes of both prisms lie in a common vertical plane.
- An auxiliary view of the triangular prism.

Instructions:

Draw, to scale 1 : 1, the following:

2.1 The given top view

2.2 The complete front view clearly showing the curve of interpenetration

2.3 The complete right view

2.4 The development of the surface of the triangular prism
Make **AB** the seam.

- Show ALL hidden detail.
- Show ALL necessary construction. **[35]**

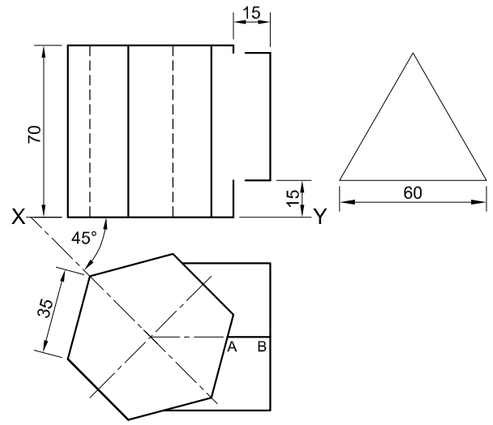

AB IS THE SEAM.

ASSESSMENT CRITERIA					
1	TOP VIEW	6			
2	FRONT VIEW	11			
3	RIGHT VIEW	7			
4	DEVELOPMENT	11			
PENALTIES (-)					
	TOTAL	**35**			

EXAMINATION NUMBER

EXAMINATION NUMBER 3

STAPLE

QUESTION 3: PERSPECTIVE

Given:
Three views of a wooden deck with a hexagonal pool and the information needed to draw a two-point perspective drawing.
PP – Picture plane
HL – Horizon line
GL – Ground line
SP – Station point

Instructions:
Complete the perspective drawing.

- Align the drawing sheet with the ground line (GL).
- Determine and label the vanishing points.
- Show ALL necessary construction.
- NO hidden detail is required. **[39]**

ASSESSMENT CRITERIA					
1	CONSTRUCTION + VPs	6			
2	BASE + STAIRS	12½			
3	POOL	13½			
4	CIRCULAR ARC	7			
PENALTIES (-)					
	TOTAL	**39**			

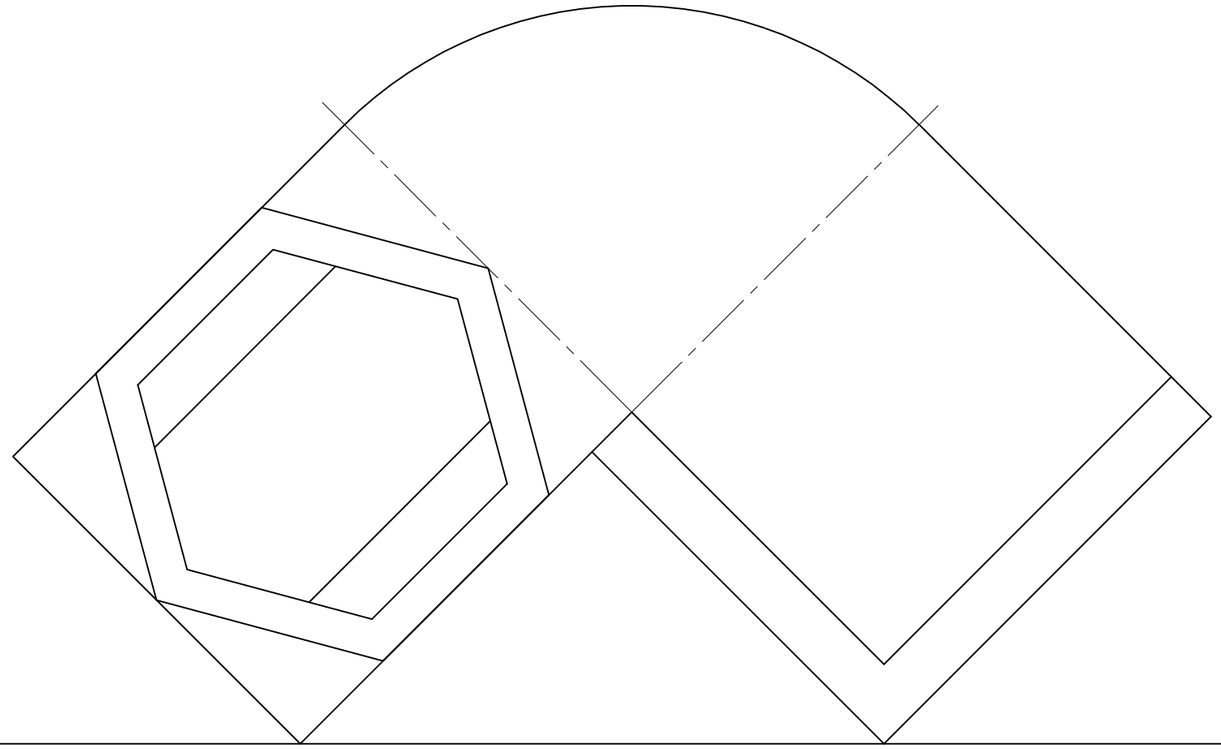

PP and HL

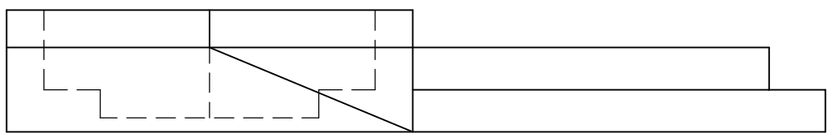

GL

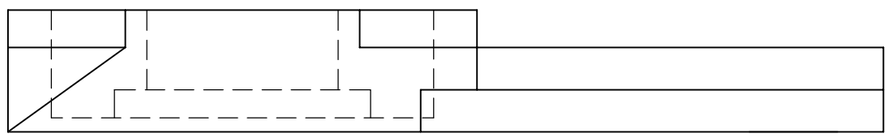

SP

EXAMINATION NUMBER	
EXAMINATION NUMBER	4

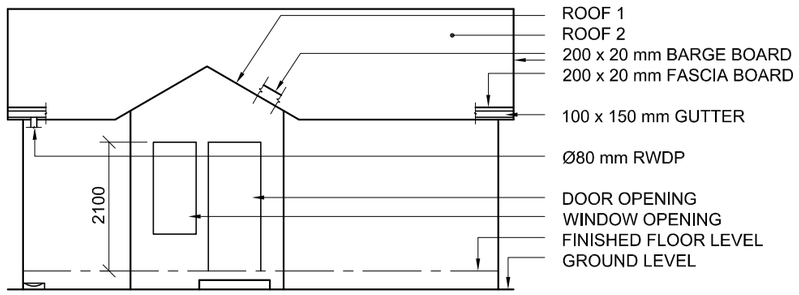

INCOMPLETE NORTH ELEVATION

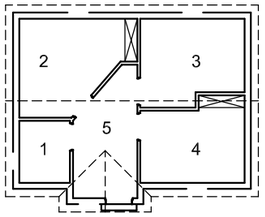

ROOM DESIGNATIONS

FLOOR FINISHES

1 TOILET:	TILE
2 ROOM 1:	CARPET
3 ROOM 2:	CARPET
4 ROOM 3:	CARPET
5 RECEPTION:	TILE

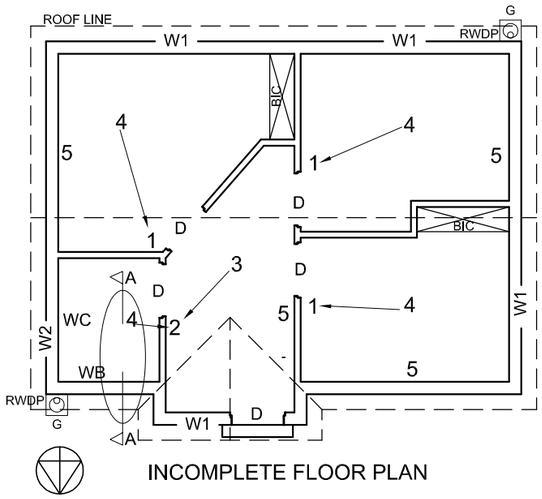

INCOMPLETE FLOOR PLAN

FEATURES
D DOOR
W1 WINDOW
W2 WINDOW

FIXTURES
WC TOILET
WB WASH BASIN

ELECTRICAL FITTINGS
1. ONE-WAY SWITCH - SINGLE-POLE
2. ONE-WAY SWITCH - DOUBLE-POLE
3. FLUORESCENT LIGHT 2 x 40 W
4. CEILING LIGHT
5. SWITCHED SOCKET OUTLET

NOTE:
THE ARROW SHOWS THE LIGHT CONNECTION TO THE SWITCH.

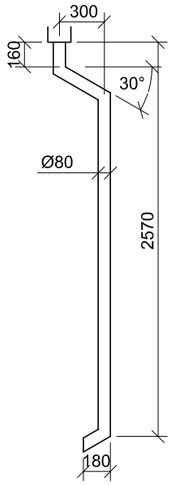

RAINWATER DOWN-PIPE DETAIL

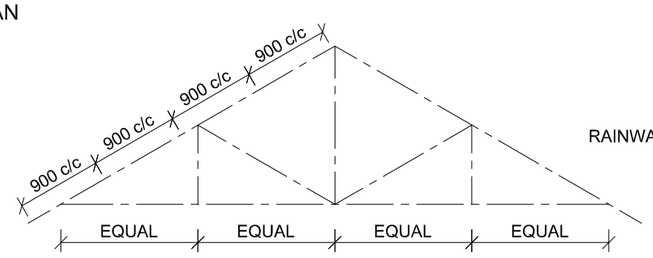

SCHEMATIC DIAGRAM OF A ROOF TRUSS FOR ROOF '2'

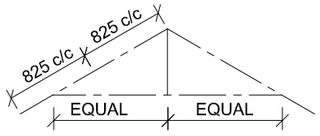

SCHEMATIC DIAGRAM OF A ROOF TRUSS FOR ROOF '1'

ROOF NOTES:
ROOF PITCH 30°

200 x 20 mm FASCIA BOARD ON ALL SIDES AND 200 x 20 mm BARGE BOARD ON THE GABLED ENDS

ROOF COVER 15 mm FIBRE CEMENT SHEETING ON 75 x 50 mm PURLINS SPACED ACCORDING TO SCHEMATIC DIAGRAMS

114 x 38 mm ROOF TRUSSES ON 114 x 38 mm WALL PLATES

9 mm CEILING BOARD ON 38 x 38 mm BRANDERING STRIPS @ 600 mm c/c

100 x 150 mm GUTTER ON ALL SIDES

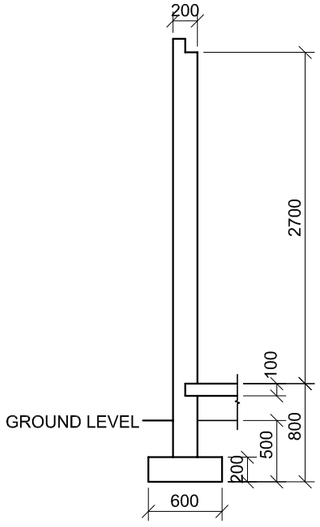

INCOMPLETE FOUNDATION AND EXTERNAL WALL DETAIL

WINDOW AND DOOR SCHEDULE

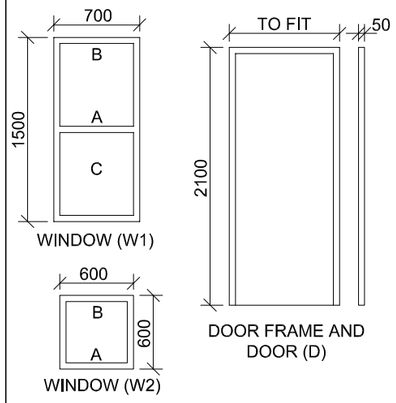

WINDOW NOTES:
- A = OPENING SIDE
- B = HINGED SIDE
- C = FIXED PANEL
- 150 x 25 mm FIBRE CEMENT SILL UNDER **ALL** WINDOWS

GULLEY

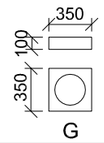

ROOF COMPONENTS

⊠	38 x 38 mm BRANDERING
⊠	114 x 38 mm WALL PLATE
⊠	75 x 50 mm PURLINS

ELECTRICAL SYMBOLS

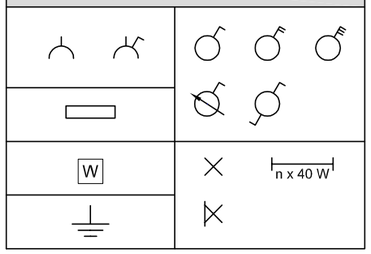

FIXTURES

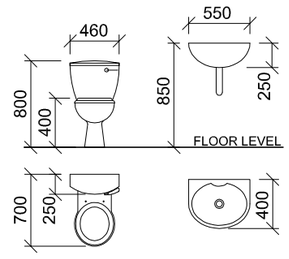

TOILET (WC) WASH BASIN (WB)

QUESTION 4: CIVIL DRAWING

Given:
- The incomplete north elevation of **new consulting rooms**, showing the walls, the door and window openings, the roof and notes
- The incomplete floor plan showing the walls, positions of the doors, windows, fixtures and electrical layout
- The incomplete foundation and external wall detail
- Room designations and floor finishes
- The rainwater down-pipe detail
- Schematic diagrams of the TWO types of roof trusses and roof notes
- A window and door schedule
- The gulley detail
- A table of roof components
- A table of electrical symbols
- A table of fixtures
- The incomplete floor plan of the **new consulting rooms**, drawn to scale 1 : 50, on page 6

Instructions:
Answer this question on page 6.

4.1 Using the given incomplete floor plan, draw, in first-angle orthographic projection and to scale 1 : 50, the following views of the **new consulting rooms**:

4.1.1 **THE COMPLETE FLOOR PLAN**
Add the following features to the drawing:
- ALL doors and windows
- ALL fixtures as indicated by abbreviations
- ALL electrical fittings as indicated by numbers
- ALL hatching detail

4.1.2 **THE COMPLETE NORTH ELEVATION**
Show the following features on the drawing:
- The outside walls, door and window detail
- The roof detail, including the fascia boards, barge boards, gutters, rainwater down-pipe and gulley
- The finished floor level

4.2 In the space provided, draw, to **scale 1 : 20**, a **DETAILED SECTION** on cutting plane A-A of the area in the ellipse shown on the incomplete floor plan.
Show the following features on the drawing:
- The complete foundation and external wall detail
- The roof detail, including the fascia board and gutter
- ALL features and fixtures to the left of the section
- ALL hatching detail. ONLY the substructure hatching may be drawn in neat freehand.

Label the following:
- The north elevation
- The room designations and floor finishes
- Using the correct abbreviations, label the following features in the correct view: ground level, damp-proof course and the finished floor level

NOTE:
- Planning is essential.
- ALL drawings must comply with the **guidelines** and **graphical symbols** as contained in the *SANS 10143.* **[96]**

STAPLE

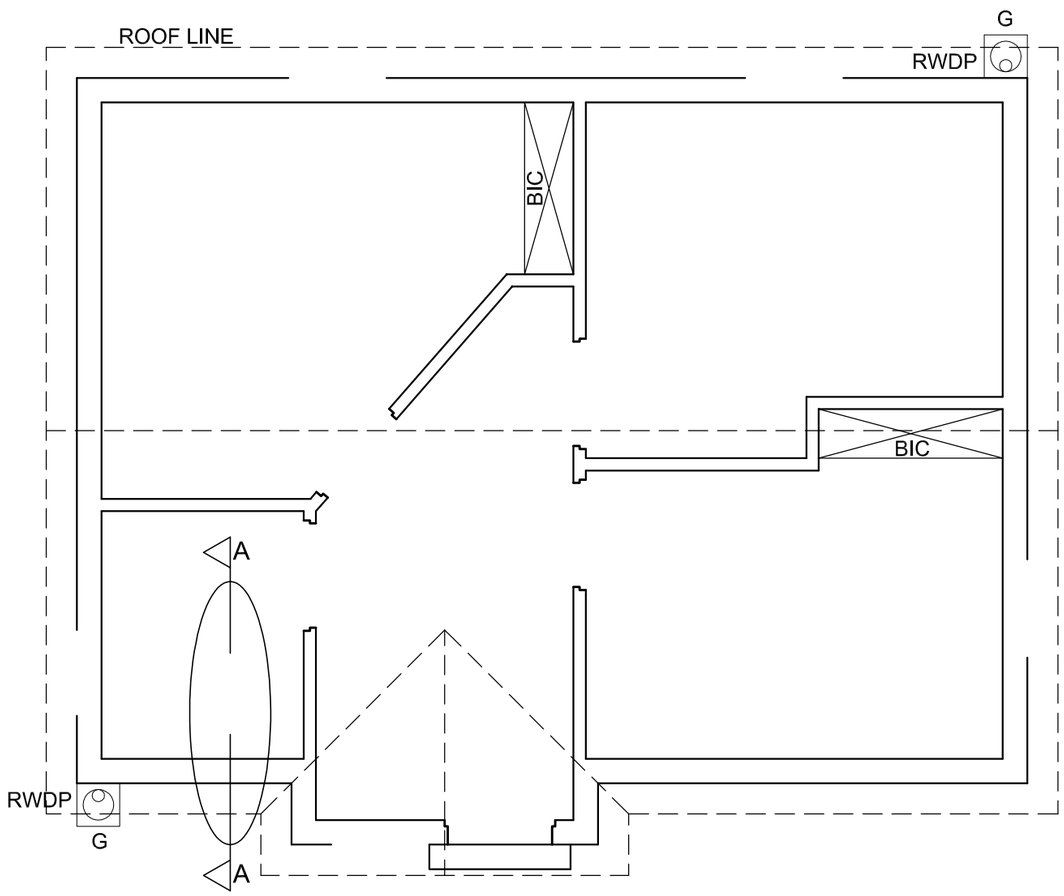

FLOOR PLAN
SCALE 1 : 50

DETAILED SECTION ON A-A
SCALE 1 : 20

FOR OFFICIAL USE ONLY		
INCORRECT SCALE(S)		
NON-ALIGNMENT OF VIEWS		
FEATURES DRAWN IN FREEHAND		
TOTAL PENALTIES (-)		

MARK ALLOCATION FOR SECTION OF ROOF (4.2 No. 1)										
A	B	C	D	E	F	G	H	I	J	

ASSESSMENT CRITERIA					
FLOOR PLAN					
		POSSIBLE	OBTAINED	SIGN	MODERATE
1	DOORS + WINDOWS	15			
2	ELECTRICAL	9			
3	FIXTURES	4			
4	HATCHING	4			
5	LABELS	5			
	SUBTOTAL	**37**			
NORTH ELEVATION					
1	ROOF	8½			
2	WALLS + RWDP + FFL + GULLEY	6½			
3	DOOR + WINDOW	6			
4	LABELS	1½			
	SUBTOTAL	**22½**			
DETAILED SECTION					
1	ROOF DETAIL	11			
2	FOUNDATION + WALL + RWDP + GULLEY + LINE BREAK	11			
3	WINDOW + WC + WB	9½			
4	HATCHING	4			
5	LABELS	1			
	SUBTOTAL	**36½**			
	TOTAL	**96**			
TOTAL PENALTIES (-)					
	GRAND TOTAL				

EXAMINATION NUMBER	
EXAMINATION NUMBER	6