STAPLE

basic education

Department:
Basic Education
REPUBLIC OF SOUTH AFRICA

NATIONAL SENIOR CERTIFICATE

GRADE 12

ENGINEERING GRAPHICS AND DESIGN P1

FEBRUARY/MARCH 2017

MARKS: 100

TIME: 3 hours

This question paper consists of 6 pages.

INSTRUCTIONS AND INFORMATION

1. This question paper consists of FOUR questions.
2. Answer ALL the questions.
3. ALL orthographic drawings are in first-angle projection, unless otherwise stated.
4. ALL drawings must be completed using instruments, unless otherwise stated.
5. ALL answers must be drawn accurately and neatly.
6. ALL the questions must be answered on the QUESTION PAPER as instructed.
7. ALL the pages, irrespective of whether the question was attempted or not, must be re-stapled in numerical sequence in the TOP LEFT-HAND CORNER ONLY.
8. Proper planning is essential in order to complete all the questions.
9. Print your examination number in the block provided on every page.
10. Any details or dimensions not given must be assumed in good proportion.

FOR OFFICIAL USE ONLY															
QUESTION	MARKS OBTAINED			½	SIGN	MODERATED			½	SIGN	RE-MARKING			½	SIGN
1															
2															
3															
4															
TOTAL															
	2	0	0			2	0	0			2	0	0		

FINAL CONVERTED MARK	CHECKED BY
100	

COMPLETE THE FOLLOWING:
CENTRE NUMBER
CENTRE NUMBER
EXAMINATION NUMBER
EXAMINATION NUMBER

STAPLE

LAND SURVEYOR'S CERTIFICATE OF THE BOUNDARY LENGTHS AND CORNER HEIGHTS ON STAND 1932. SURVEYED ON 2015-09-15	
BOUNDARY LENGTHS IN MILLIMETRES	CORNER HEIGHTS IN METRES
AB = 25200	A = 1250
BC = 72000	B = 1251
CD = 50967	C = 1251
DA = 27600	D = 1250

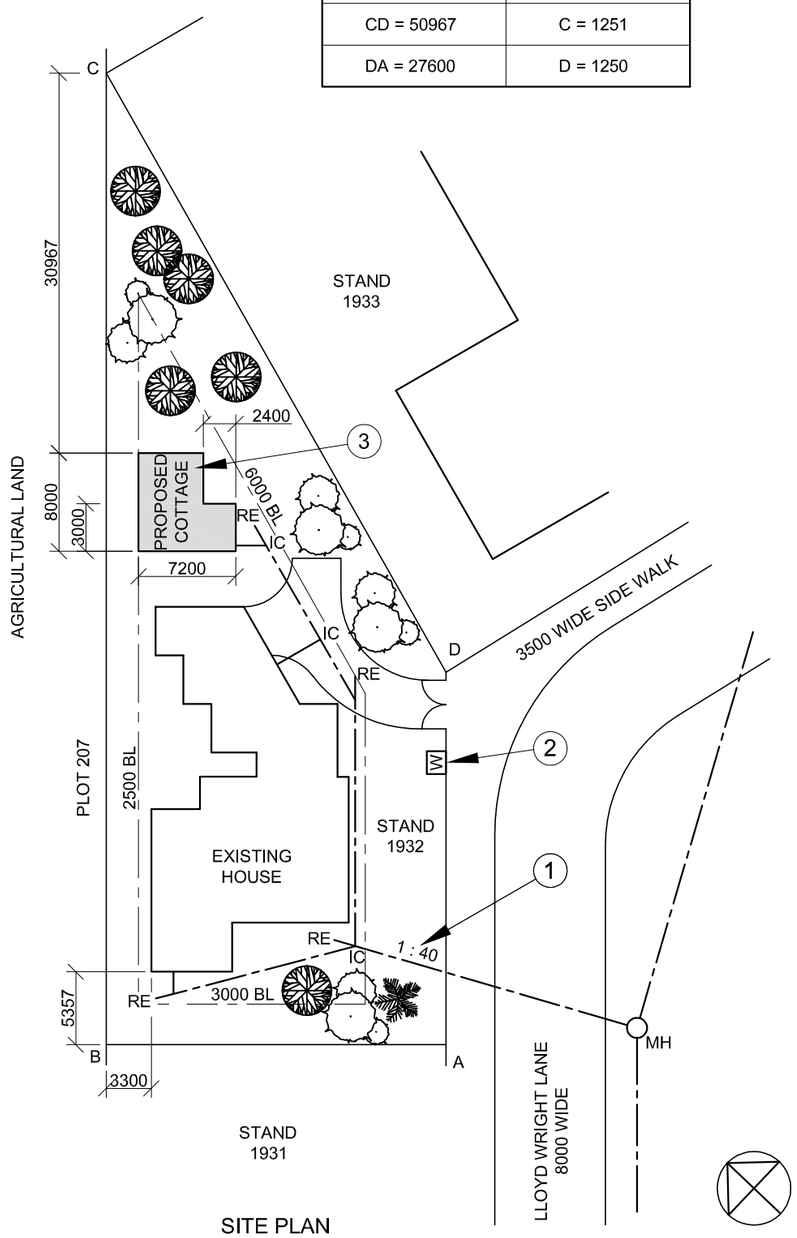

SITE PLAN
SCALE 1 : 450

NOTE:
Contractors must verify all dimensions and levels on site before commencing work. Architects to be notified immediately of any discrepancies.

ARCHITECT'S SIGNATURE .....

CLIENT'S SIGNATURE .....

ANSWER 18
In the space below, draw, in neat freehand and according to the *SANS 10143*, a cross section of a piece of TIMBER or UNDRESSED WOOD.

ANSWER 19
In the space below, draw, in neat freehand, the front view and top view of the *SANS 10143* graphic symbol for a WATER CLOSET.

REVISION	DATE	DESCRIPTION

PRINTED BY	DATE OF PRINT
FRANK PRINTERS	2015/10/12

DRAWING TITLE
SITE PLAN STAND 1932

PROJECT
PROPOSED NEW COTTAGE ON STAND 1932, KLIPPLAAT

PROJECT NUMBER	DRAWING NUMBER
GR447-101	447P6

DATE	DRAWN	CHECKED	SCALE
2015/10/10	J VAN WYK	C K BIRD	1 : 450

REFERENCE CODE
QU1-2015

QUESTION 1: ANALYTICAL (CIVIL)

Given:
The site plan for a proposed new cottage, a title panel and a table of questions. The drawing has not been prepared to the indicated scale.

Instructions:
Complete the table below by neatly answering the questions, which refer to the accompanying drawing and title panel.
[30]

	QUESTIONS	ANSWERS			
1	On what date was the site plan printed?		1		
2	Who prepared the drawing?		1		
3	How many revisions have been made to the drawing?		1		
4	What is the length of boundary CD?		1		
5	What scale is indicated for the drawing?		1		
6	What does the abbreviation IC stand for?		1		
7	What does the abbreviation RE stand for?		1		
8	What does the abbreviation MH stand for?		1		
9	What is the shortest distance from the existing house to STAND 1931 in metres?		1		
10	What does the ratio at 1 indicate?		1		
11	Name the feature at 2.		1		
12	In what colour should the feature at 3 be shown?		1		
13	What is the difference in height between corner A and corner C in metres?		1		
14	Why would a residential development not be allowed on PLOT 207?		1		
15	Which elevation of the existing house faces STAND 1933?		2		
16	In the space below (ANSWER 16), determine the perimeter of the proposed new cottage in metres.		3		
17	In the space below (ANSWER 17), determine the total area of STAND 1932 in square metres.		4		
18	In the space in the title panel (ANSWER 18), draw, in neat freehand and according to the *SANS 10143*, a cross section of a piece of TIMBER or UNDRESSED WOOD.		3		
19	In the space in the title panel (ANSWER 19), draw, in neat freehand, the front view and top view of the *SANS 10143* graphic symbol for a WATER CLOSET.		4		
		TOTAL	**30**		

ANSWER 16
Show ALL calculations.

ANSWER 17
Show ALL calculations.

EXAMINATION NUMBER

EXAMINATION NUMBER 2

STAPLE

QUESTION 2: DEVELOPMENT

Given:

- The front view, top view and left view of a rectangular to round transition piece with seam AB
- The position of point P on the drawing sheet

Instructions:

Draw, to scale 1 : 1, the following views of the transition piece:

2.1 The given front view and top view

2.2 The development of the transition piece

- Make AB the seam.
- Show ALL construction. **[36]**

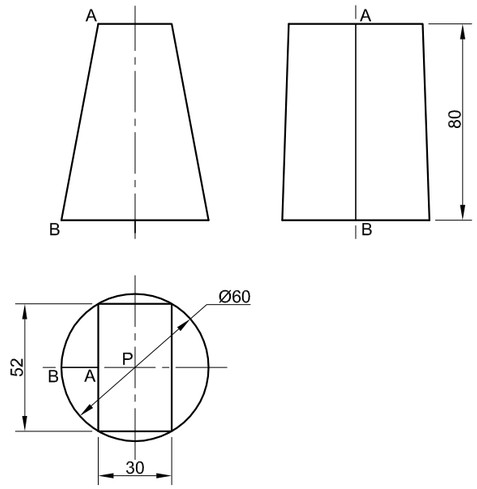

P

ASSESSMENT CRITERIA					
1	TOP VIEW	$4\frac{1}{2}$			
2	FRONT VIEW	$2\frac{1}{2}$			
3	TL CONSTRUCTION	6			
4	DEVELOPMENT	23			
PENALTIES (-)					
	TOTAL	**36**			

EXAMINATION NUMBER

EXAMINATION NUMBER

STAPLE

QUESTION 3: PERSPECTIVE

Given:
Two views of a stage for a play and the information needed to draw a two-point perspective drawing
PP – Picture plane
HL – Horizon line
GL – Ground line
SP – Station point

Instructions:
Complete the perspective drawing.

- Align the drawing sheet with the ground line (GL).
- Determine and label the vanishing points.
- Show ALL construction.
- NO hidden detail is required. **[37]**

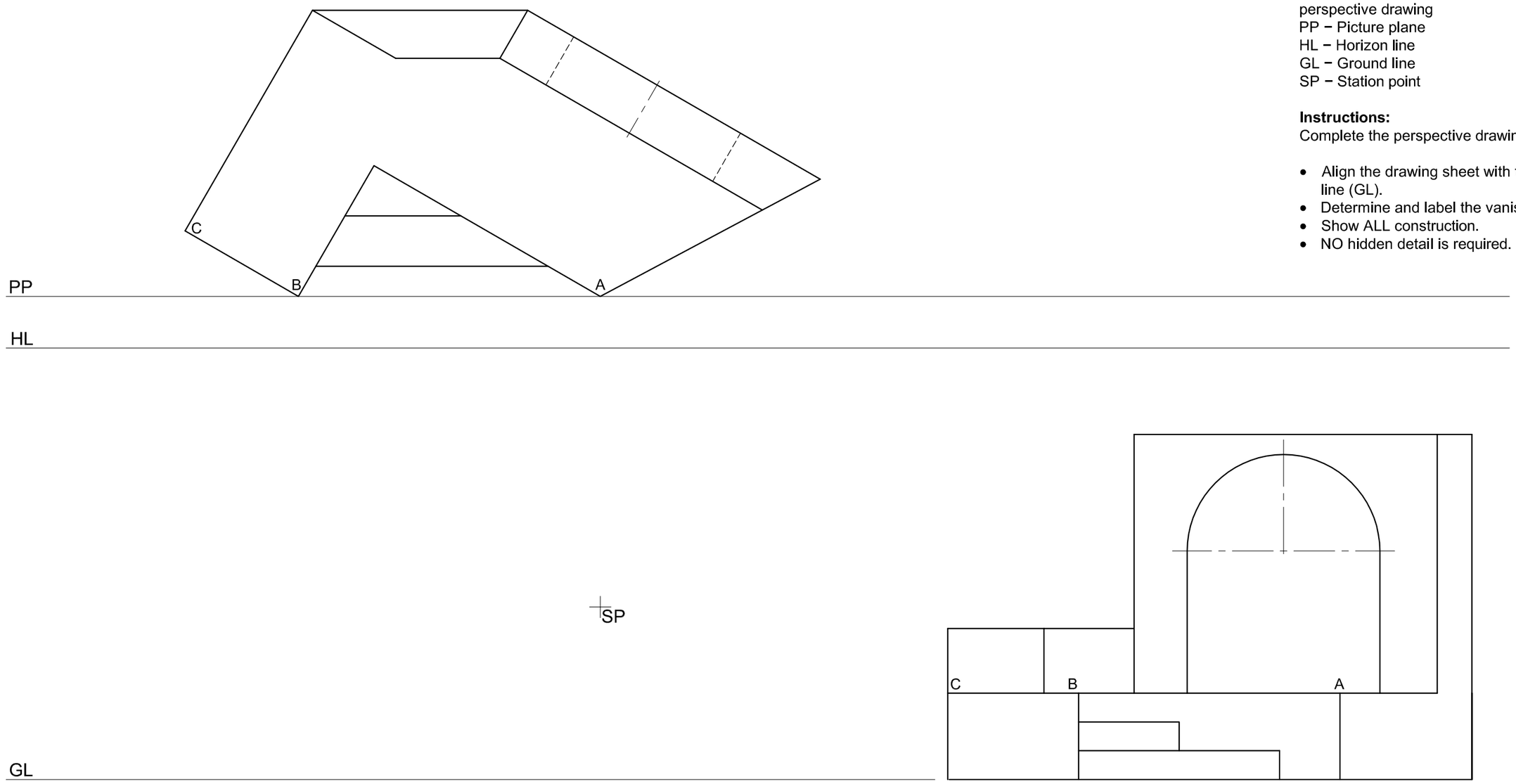

ASSESSMENT CRITERIA					
1	CONSTRUCTION + VPs	7			
2	STEPS + FLOOR + WALLS	23			
3	CIRCULAR ARC	7			
PENALTIES (-)					
	TOTAL	**37**			
EXAMINATION NUMBER					
EXAMINATION NUMBER					4

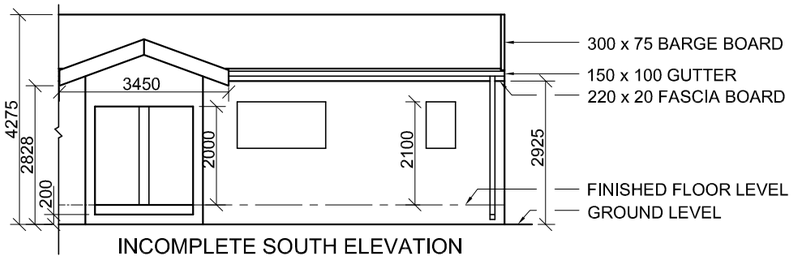

INCOMPLETE SOUTH ELEVATION

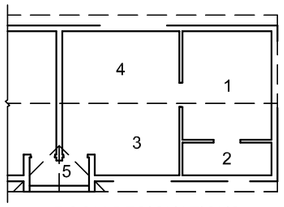

ROOM DESIGNATIONS

FLOOR FINISHES

1	BEDROOM:	CARPET
2	BATHROOM:	TILE
3	KITCHEN:	TILE
4	LOUNGE:	TILE
5	ENTRANCE:	TILE

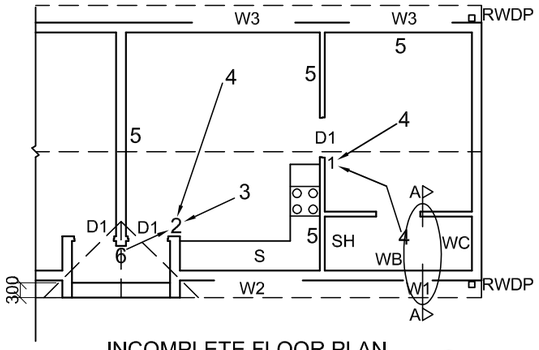

INCOMPLETE FLOOR PLAN

FEATURES

D1	DOOR
W1	WINDOW
W2	WINDOW
W3	WINDOW

FIXTURES

WC	TOILET
WB	WASH BASIN
SH	SHOWER
S	SINK

ELECTRICAL FITTINGS

1 ONE-WAY SWITCH - DOUBLE-POLE
2 ONE-WAY SWITCH - THREE-POLE
3 FLUORESCENT LIGHT 2 x 40 W
4 CEILING LIGHT
5 SWITCHED SOCKET OUTLET
6 WALL-MOUNTED LIGHT

NOTE:
THE ARROW SHOWS THE LIGHT CONNECTION TO THE SWITCH.

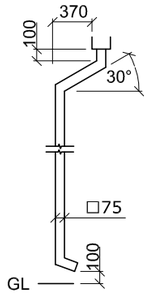

RAINWATER DOWN-PIPE

ROOF NOTES:
ROOF PITCH 20°

115 x 38 mm ROOF TRUSSES ON 115 x 38 mm WALL PLATES

ROOF OVERHANG 350 mm TO END OF ROOF TRUSSES

ROOF COVER 15 mm FIBRE CEMENT SHEETING ON 75 x 50 mm PURLINS @ 1000 mm c/c

220 x 20 mm FASCIA BOARD ON ALL SIDES AND 300 x 75 mm BARGE BOARD ON GABLED ENDS

150 x 100 mm GUTTERS ON ALL SIDES

9 mm CEILING BOARD ON 38 x 38 mm BRANDERING STRIPS @ 450 mm c/c

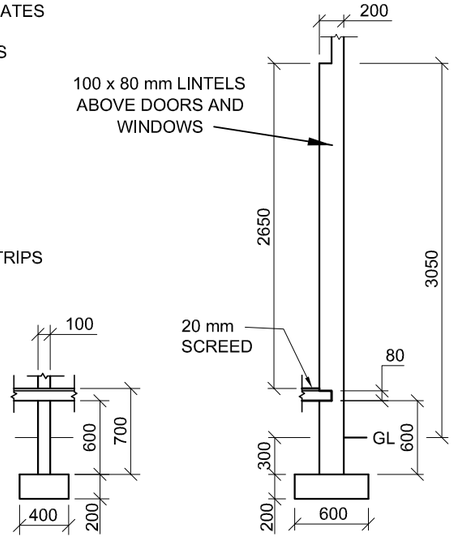

INCOMPLETE WALL AND FOUNDATION DETAIL OF AN INTERNAL AND EXTERNAL WALL

ROOF COMPONENTS	
	300 x 75 mm BARGE BOARD
	220 x 20 mm FASCIA BOARD

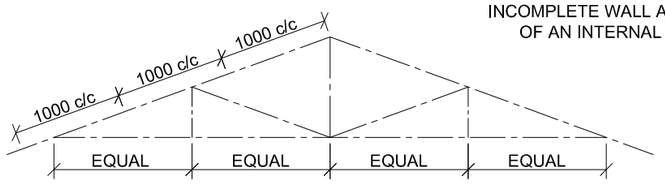

SCHEMATIC DIAGRAM OF A ROOF TRUSS

ELECTRICAL SYMBOLS

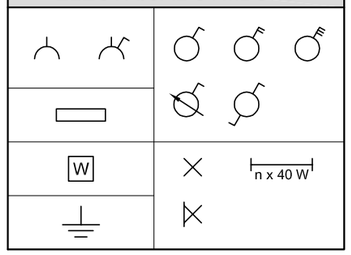

DOOR AND WINDOW SCHEDULE

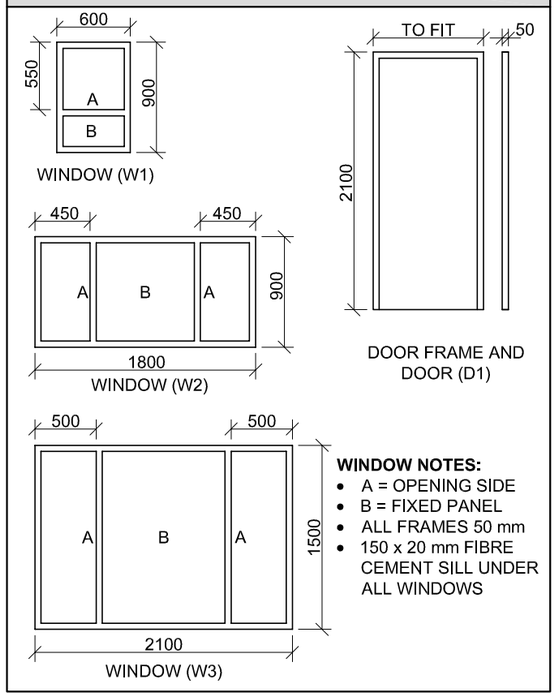

WINDOW NOTES:
- A = OPENING SIDE
- B = FIXED PANEL
- ALL FRAMES 50 mm
- 150 x 20 mm FIBRE CEMENT SILL UNDER ALL WINDOWS

FIXTURES

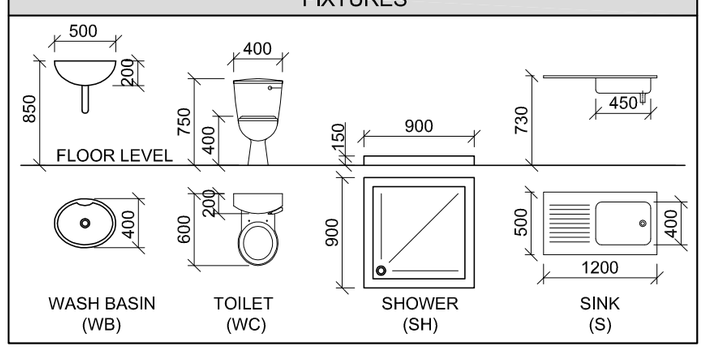

QUESTION 4: CIVIL DRAWING

Given:
- The incomplete south elevation of the eastern unit and entrance of a **new cluster house**, showing the walls, the door and window openings, the roof and notes
- The incomplete floor plan showing the walls, positions of the doors, windows, fixtures and electrical layout
- Roof notes, a table of roof components and a schematic diagram of a roof truss
- Room designations and floor finishes
- The incomplete wall and foundation detail
- The rainwater down-pipe
- A table of electrical symbols
- A door and window schedule
- A table of fixtures
- The incomplete floor plan of the eastern unit and entrance of the **new cluster house**, drawn to scale 1 : 50, and the incomplete external wall foundation and the break line of the detailed section, drawn to scale 1 : 20, on page 6

Instructions:
Answer this question on page 6.

4.1 Using the given incomplete floor plan, draw, in first-angle orthographic projection and to scale 1 : 50, the following views of the given eastern unit and entrance of the **new cluster house**:

4.1.1 **THE COMPLETE FLOOR PLAN**
Add the following features to the drawing:
- ALL doors and windows
- ALL fixtures as indicated by the abbreviations
- ALL electrical fittings as indicated by the numbers
- ALL hatching detail

4.1.2 **THE COMPLETE SOUTH ELEVATION**
Show the following features on the drawing:
- The outside walls, windows and door detail
- The roof detail, including the fascia board, barge boards, gutter and rainwater down-pipe
- The finished floor level

4.2 Using the incomplete foundation and break line on page 6, draw, to **scale 1 : 20**, a **DETAILED SECTION** on cutting plane A-A of the area in the ellipse shown on the incomplete floor plan.
Show the following features on the drawing:
- The wall and foundation detail of the internal and external wall
- The window detail
- The roof detail, including the fascia board, gutter and rainwater down-pipe
- ALL features and fixtures to the right (east) of the ellipse
- ALL hatching detail. ONLY the substructure hatching may be drawn in neat freehand.

Label the following:
- The south elevation
- The room designations and floor finishes
- Ground level, finished floor level and damp-proof course (use the correct abbreviations and show it on ALL the relevant views)

NOTE:
ALL drawings must comply with the **guidelines** and **graphical symbols** contained in the *SANS 10143.* **[97]**

STAPLE

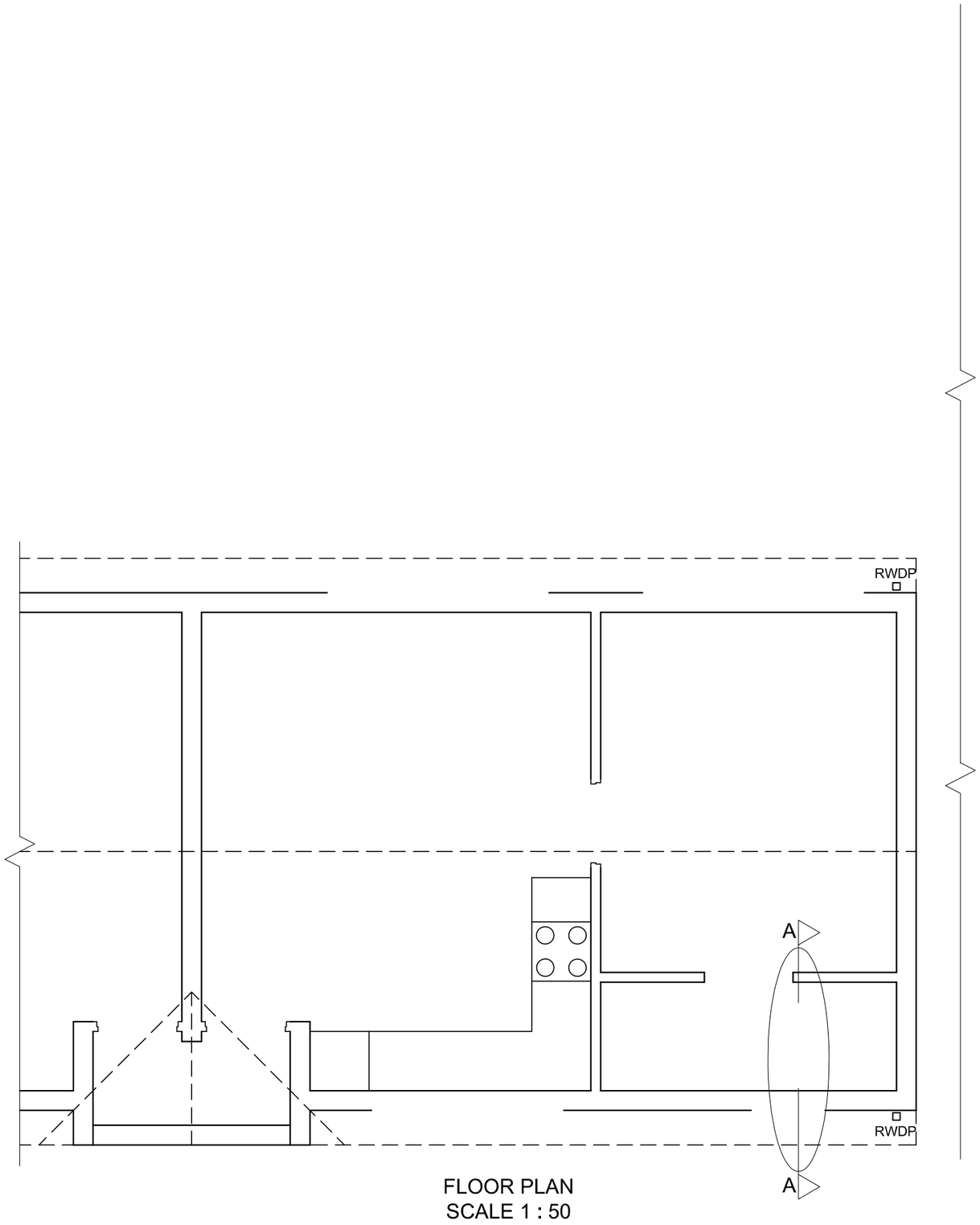

FLOOR PLAN
SCALE 1 : 50

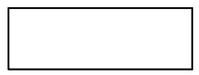

SECTION A-A
SCALE 1 : 20

1. MARK ALLOCATION FOR SECTION OF ROOF	
A (1)	
B (1)	
C (2)	
D (3)	
E (1)	
F (1)	
G (1)	
H (1)	
I (3)	
TOTAL	

FOR OFFICIAL USE ONLY	
INCORRECT SCALE	
INCORRECT POSITIONING OF VIEWS	
ROTATED VIEWS	
PRINTED CAPITAL LETTERS	
TOTAL	

ASSESSMENT CRITERIA					
FLOOR PLAN					
1	DOORS + WINDOWS	11			
2	ELECTRICAL	$8\frac{1}{2}$			
3	FIXTURES	$7\frac{1}{2}$			
4	HATCHING	4			
5	LABELS	4			
SUBTOTAL		**35**			
SOUTH ELEVATION					
1	ROOF	$6\frac{1}{2}$			
2	WALLS + RWDP + FFL + GUTTER	$7\frac{1}{2}$			
3	DOORS + WINDOWS	$11\frac{1}{2}$			
4	LABELS	1			
SUBTOTAL		**$26\frac{1}{2}$**			
DETAILED SECTION					
1	ROOF	14			
2	FOUNDATIONS + WALLS + SLAB	$13\frac{1}{2}$			
3	WINDOW + LINTELS	$3\frac{1}{2}$			
4	FIXTURE	3			
5	LABELS	$1\frac{1}{2}$			
SUBTOTAL		**$35\frac{1}{2}$**			
TOTAL		**97**			
PENALTIES (-)					
GRAND TOTAL					

EXAMINATION NUMBER

EXAMINATION NUMBER 6