education

Department:
Education
REPUBLIC OF SOUTH AFRICA

NATIONAL SENIOR CERTIFICATE

GRADE 12

ENGINEERING GRAPHICS AND DESIGN P2

NOVEMBER 2008

MARKS: 100

TIME: 3 hours

This question paper consists of 6 pages.

INSTRUCTIONS AND INFORMATION

1. The question paper consists of FOUR questions.
2. Answer ALL the questions.
3. All drawings are in third-angle orthographic projection unless otherwise stated.
4. All drawings must be drawn to scale 1:1, unless otherwise stated.
5. The questions must be answered on the answer sheets provided.
6. All the answer sheets must be re-stapled in numerical sequence and handed in irrespective of whether the question was attempted or not.
7. Time management is essential in order to complete all the questions.
8. Print your examination number in the block provided on every answer sheet.
9. All answers must be drawn accurately and neatly.
10. Any details or dimensions not given must be assumed in good proportion.

FOR OFFICIAL USE ONLY								
					MODERATED MARK			
1								
2								
3								
4								
TOTAL								
	2	0	0					

FINAL CONVERTED MARK	CHECKED BY
100	

COMPLETE THE FOLLOWING:
EXAMINATION NUMBER
EXAMINATION NUMBER
EXAMINATION CENTRE
EXAMINATION CENTRE

STAPLE

QUESTION 1: ANALYTICAL (MECHANICAL)

Given:
A table of questions and a set of working drawings.

Instructions:
Complete the table below by neatly printing the answers to the questions, which all refer to the accompanying drawings and the title block.

[26]

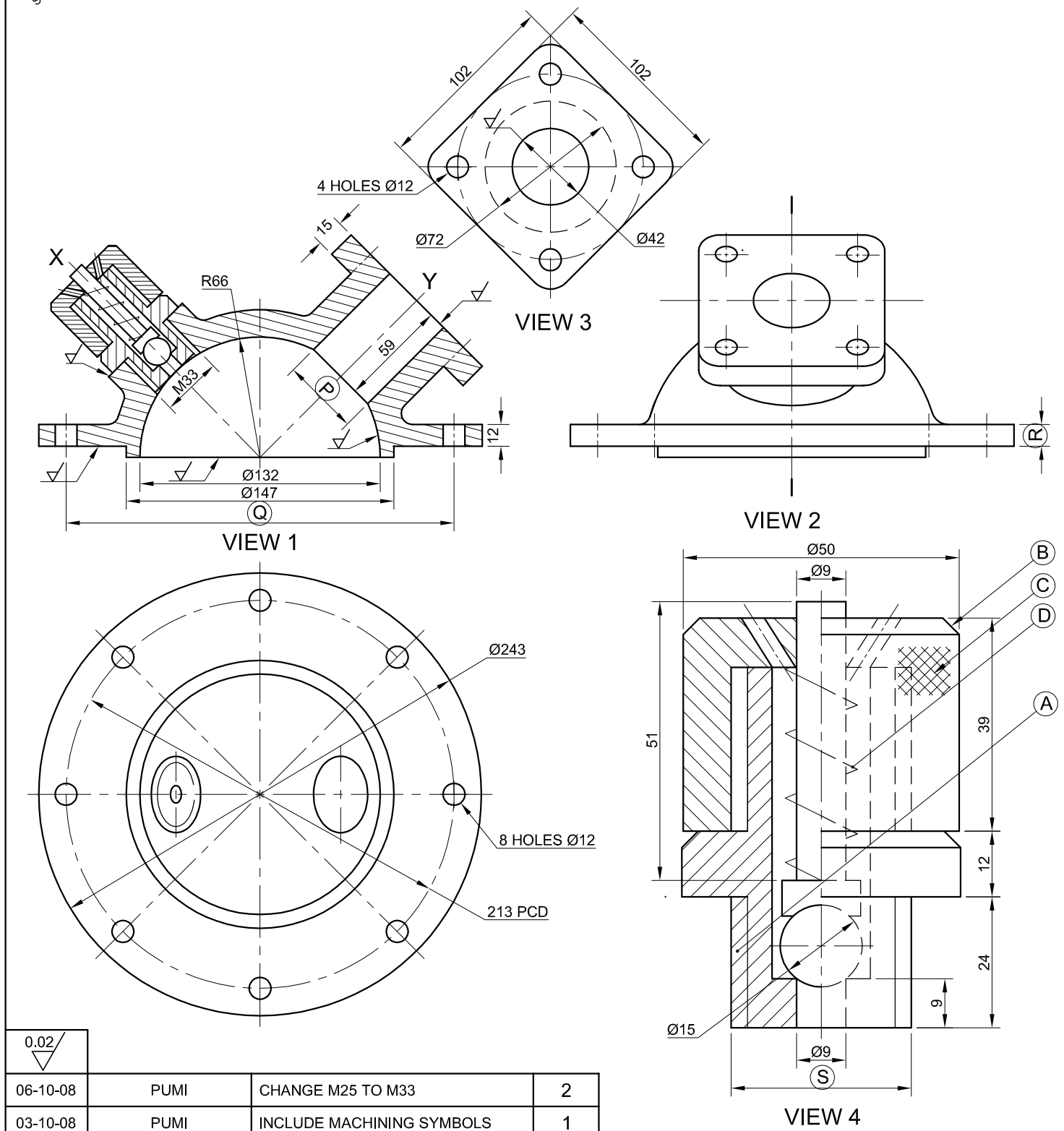

QUESTIONS		ANSWERS	
1	On what date was the drawing checked?		½
2	In which city is the manufacturing company situated?		½
3	What is the name of the drawing file?		½
4	How many revisions have been made to the drawing?		½
5	What is the tolerance allowed on the dimensions?		½
6	How many bolts are required to secure the cylinder head to the body?		½
7	How many surfaces must be machined?		1
8	What is feature **A** called?		1
9	What is feature **B** called?		1
10	What is feature **C** called?		1
11	What is feature **D** called?		1
12	How many parts does the assembly consist of?		1
13	What would view 3 be called?		1
14	Name the type of section on: VIEW 1 VIEW 4		2
15	Determine the dimensions at: P Q R S		4
16	What is the angle between the holes marked **X** and **Y** on view 1?		1
17	Draw the arrows for the cutting plane located on view 2 and label it A-A.		3
18	What does the symbol 0.02 mean?		1
19	What orthographic projection system has been used?		1
20	In the box below neatly draw, in freehand, the symbol for the projection system used.		4
		TOTAL 26	

0.02

DATE	CHANGED BY	REVISION DESCRIPTION	№
06-10-08	PUMI	CHANGE M25 TO M33	2
03-10-08	PUMI	INCLUDE MACHINING SYMBOLS	1

ALL DIMENSIONS ARE IN MILLIMETRES

DRAWING No. N8/DOE/001	MATERIAL: CAST IRON	DRAWN: JOHAN	UNLESS OTHERWISE SPECIFIED TOLERANCES ON DIMENSIONS ARE: ± 0,05
FILE NAME: N-P2-E018	HEAT TREATMENT: NONE	DATE: 25/09/08	
MEGA MANUFACTURING	DIAS STREET EAST LONDON 5240 www.mega.co.za	CHECKED: KENNETH	ALL UNSPECIFIED RADII ARE R4
		DATE: 02/10/08	
		APPROVED: JABU	
CYLINDER HEAD ASSEMBLY		DATE: 16/10/08	DRAWING PROGRAMME: AUTOCAD 2008
		SCALE: 1:5	

SYMBOL

EXAMINATION NUMBER	
EXAMINATION NUMBER	2

STAPLE

QUESTION 2: LOCI (CAM)

A toy manufacturing company wishes to design a toy car that when it is pushed along the ground, the body of the car rises and falls. This can be achieved by attaching a cam to the inside of the wheel with a roller-follower attached to the body of the car.

The specifications for the movement are as follows:

- The car rises with uniform motion to a height of 23mm over the first 90°
- There is a dwell period for the next 60°
- It then rises a further 37mm over the next 75°
- There is another dwell period for the next 60°
- The car returns to its original position over the final 75°

Given:

The cam shaft and the follower detail in its lowest position. The cam rotates in an anti-clockwise direction as shown by the arrow.

Instruction:

- Copy the camshaft and follower detail. Show the arrow indicating the direction of rotation.
- Draw a displacement graph with a horizontal scale of 30° equal to 8mm and a vertical scale of 1:1 for the given motion. Label the graph and include a scale.
- Project and draw the cam profile that would generate the given motion.

[36]

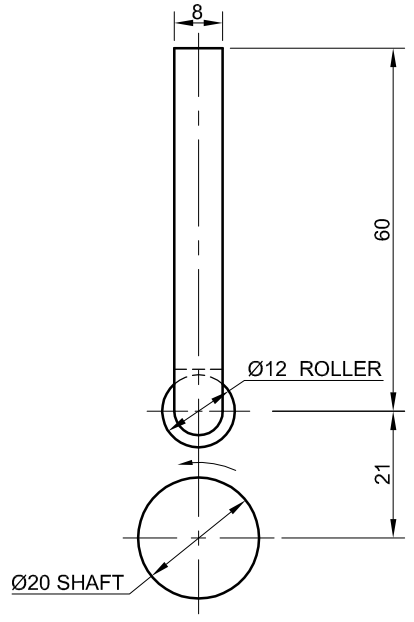

CAMSHAFT AND FOLLOWER DETAIL

ASSESSMENT CRITERIA

GRAPH	9
GIVEN INFO: FOLLOWER, MIN HEIGHT	
DIRECTION ARROW	
SHAFT and CL,s	11
CONSTRUCTION	4
ROLLER POSITIONS + CURVE QUALITY	12
TOTAL	**36**

EXAMINATION NUMBER	
EXAMINATION NUMBER	3

STAPLE

QUESTION 3: ISOMETRIC DRAWING

Given:
The front view and top view of a hexagonal slide plate that is cut by cutting plane B-B.

Instructions:
- Convert the orthographic views of the hexagonal slide plate into a sectional isometric drawing on B-B.
- Make corner A the lowest point of the drawing so that the sectioned surfaces are visible.
- Show ALL necessary construction.
- NO hidden detail is required.

[40]

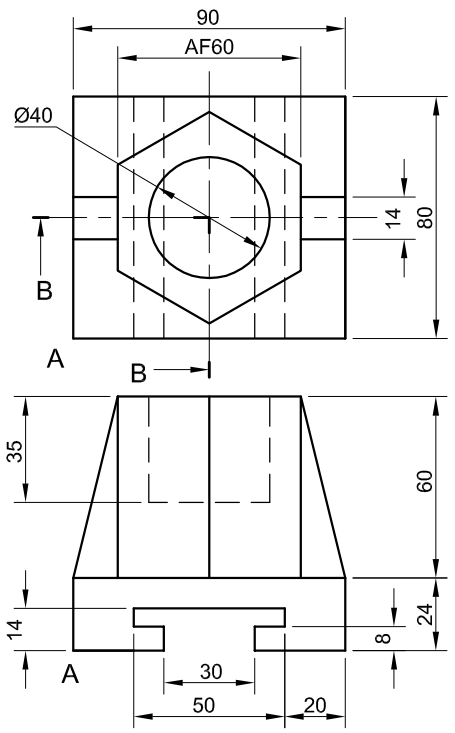

ASSESSMENT CRITERIA

AUXILIARY VIEW	=	2
ISOMETRIC SURFACES	=	6
NON-ISOMETRIC LINES	=	2
SECTIONED SURFACE	=	9½
ISOMETRIC CIRCLES	=	4
CIRCLE CONSTRUCTION	=	3
HATCHING	=	4
CENTRE LINES	=	2½
HEXAGON	=	5
PLACING ON A	=	2
TOTAL	**=**	**40**

EXAMINATION NUMBER	
EXAMINATION NUMBER	4

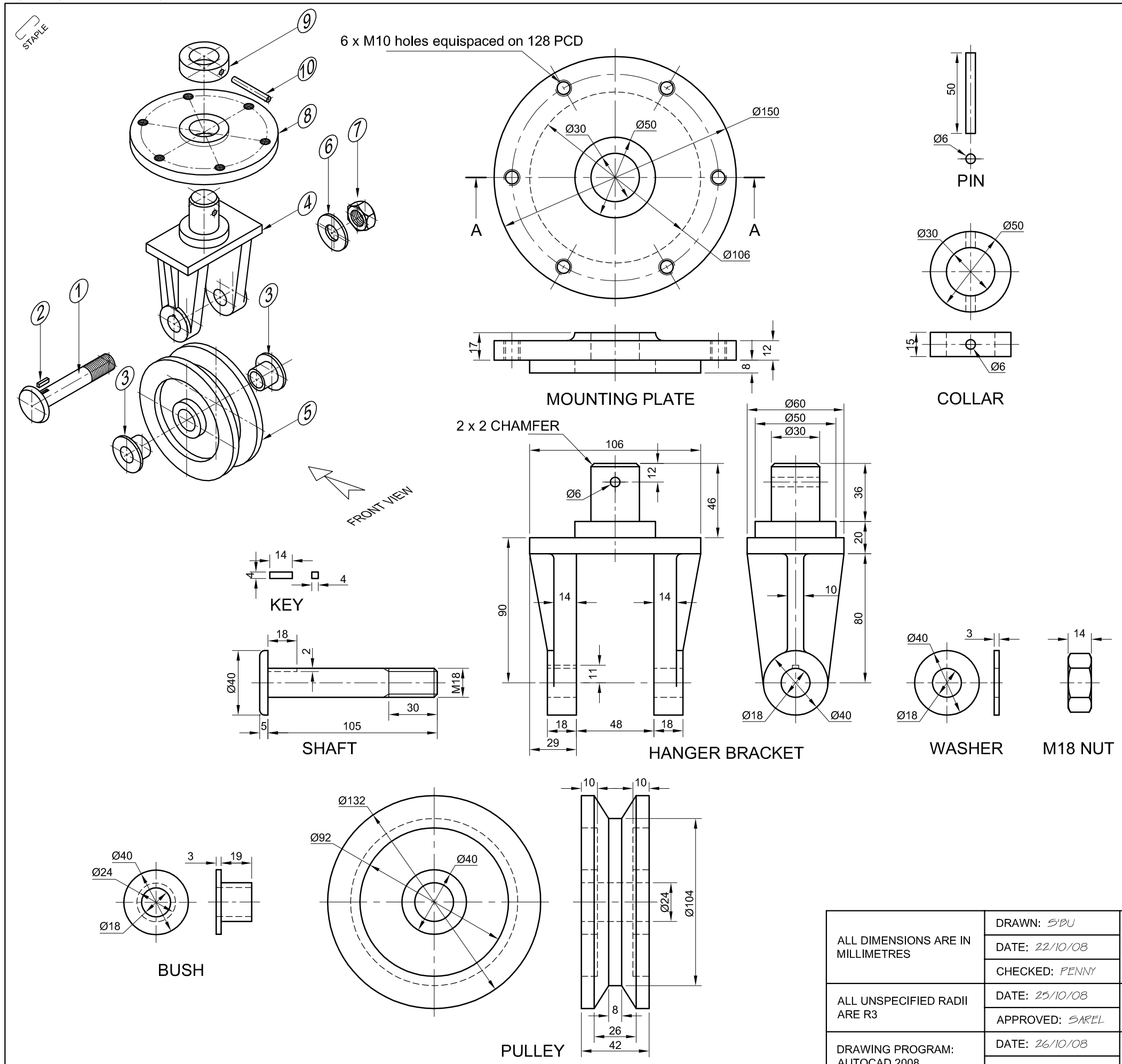

QUESTION 4: ASSEMBLY DRAWING

Given:
The exploded isometric drawing of the parts of an overhead swivel pulley, showing the position of each part relative to all the others.

Orthographic views of each of the parts of the overhead swivel pulley.

Instructions:
Answer this question on ANSWER SHEET 4 on page 6.
Draw, to scale 1:1, the following view of the assembled parts of the overhead swivel pulley:

- The full sectional front view on A-A as seen from the arrow indicated in the exploded isometric drawing. The vertical cutting plane passes through the centre line of the assembly as shown on the top view of the mounting plate.

Note:

- Show THREE faces of the M18 nut and ALL necessary construction.
- ALL drawing must comply with the guidelines contained in the *SABS 0111.*

[98]

PARTS LIST

PART	QUANTITY	MATERIAL
1. SHAFT	1	MILD STEEL
2. KEY	1	MILD STEEL
3. BUSH	2	BRASS
4. HANGER BRACKET	1	MILD STEEL
5. PULLEY	1	CAST IRON
6. WASHER	1	SPRING STEEL
7. M18 NUT	1	MILD STEEL
8. MOUNTING PLATE	1	MILD STEEL
9. COLLAR	1	MILD STEEL
10. PIN	1	MILD STEEL

ALL DIMENSIONS ARE IN MILLIMETRES	DRAWN: S'BU	MEGA MANUFACTURING	DIAS STREET EAST LONDON 5240 www.mega.co.za
	DATE: 22/10/08		
	CHECKED: PENNY		
ALL UNSPECIFIED RADII ARE R3	DATE: 25/10/08	TITLE OVERHEAD SWIVEL PULLEY	
	APPROVED: SAREL		
DRAWING PROGRAM: AUTOCAD 2008	DATE: 26/10/08	NATIONAL SENIOR CERTIFICATE GRADE 12 NOVEMBER 2008	PAGE 5
	SCALE: 1:1		

STAPLE

ANSWER SHEET 4

ASSESSMENT CRITERIA						
	FACET		SECTIONING		TOTAL	
	POSSIBLE	OBTAINED	POSSIBLE	OBTAINED	POSSIBLE	OBTAINED
1. SHAFT	8½		½		9	
2. KEY	1		1½		2½	
3. BUSH	4		3		7	
4. HANGER BRACKET	15		4½		19½	
5. PULLEY	14		3		17	
6. WASHER	1		½		1½	
7. M18 NUT	6½		½		7	
8. MOUNTING PLATE	12		3		15	
9. COLLAR	2		1		3	
10. PIN	1		½		1½	
CENTRE LINES					5	
ASSEMBLY					10	
				TOTAL	**98**	

EXAMINATION NUMBER	
EXAMINATION NUMBER	6